LET	REVISIONS	DATE	BY	ECO
NC	INITIAL RELEASE	-	XXX	-

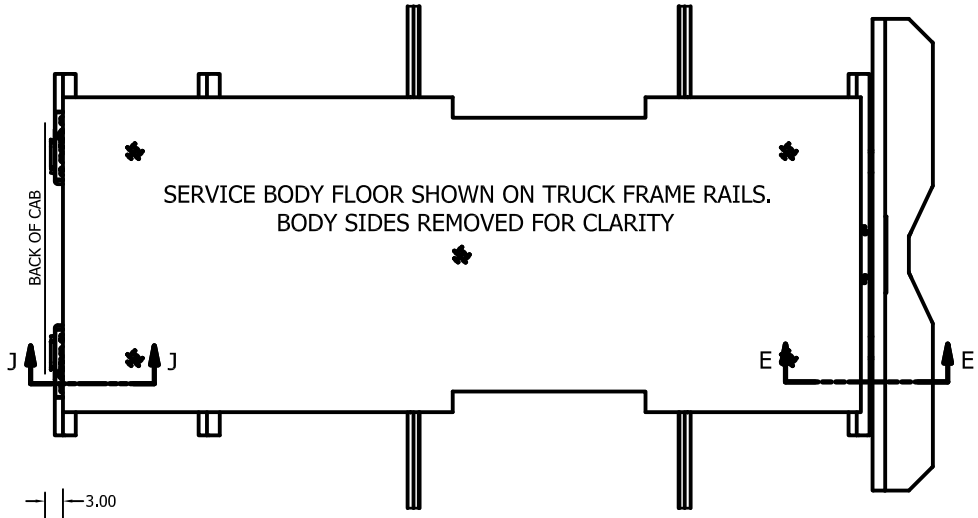

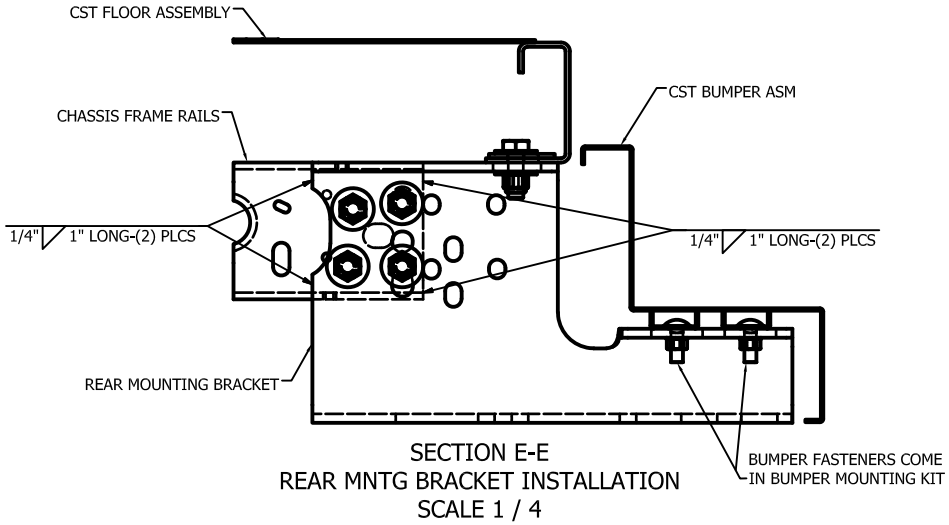

SECTION E-E
REAR MNTG BRACKET INSTALLATION
SCALE 1 / 4

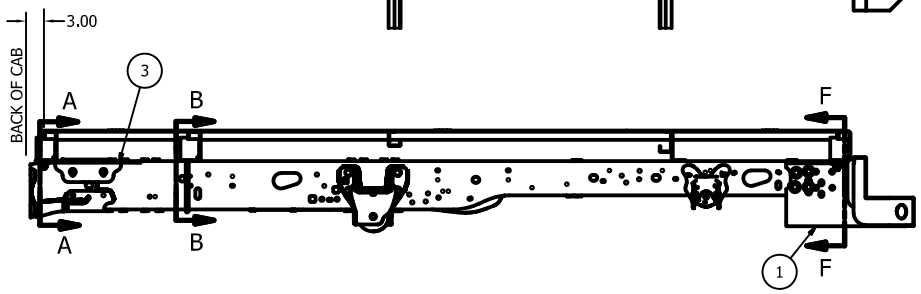

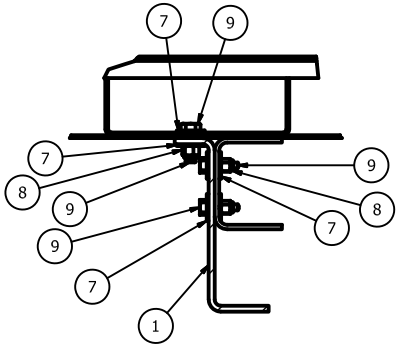

DETAIL G
SCALE 1 / 6

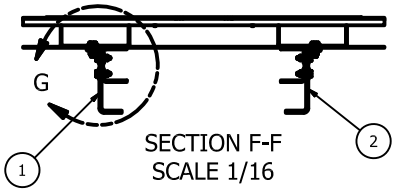

SECTION F-F
SCALE 1/16

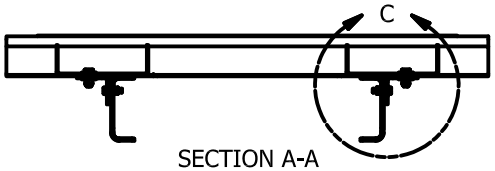

SECTION A-A
FRONT MOUNTING

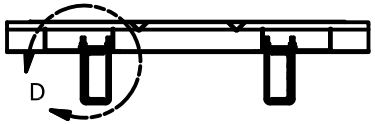

SECTION B-B
INTERMEDIATE MOUNTING

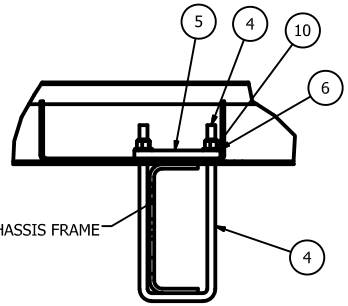

DETAIL D
SCALE 1/6

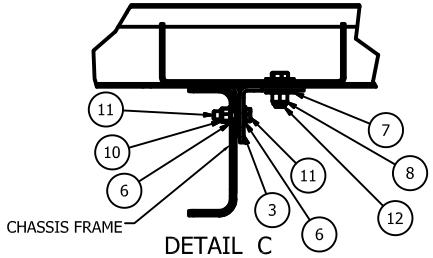

DETAIL C
SCALE 1 / 6

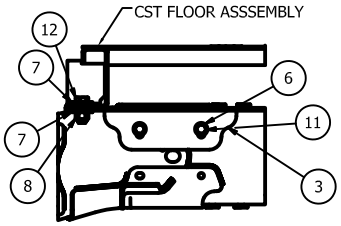

SECTION J-J
SCALE 1/8

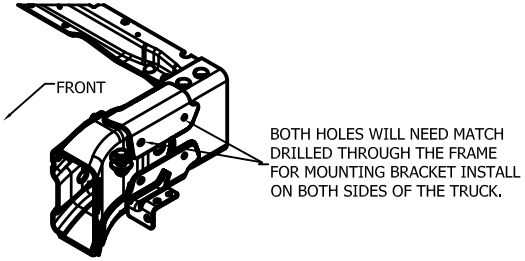

CHASSIS FRAME BEHIND CAB
SCALE 1/8

INCLUDE A COPY OF THIS DRAWING

ITEM	QTY	DWG ID	PART NUMBER	DESCRIPTION
14	12	9270	927190	1/2" PLASTIC HOLE PLUG, CMPT BTM
13	1	0900	144403-03	PLASTIC PARTS BAG, 8" X 12"
12	2	9170	917516	SCREW 5/8-11 X 1.75 GR 8 HHC
11	4	9170	917475	HHCS 1/2-13 X 2.00 GRD.8
10	8	9190	144736	NUT-LK- 1/2-13 GR8

ITEM	QTY	DWG ID	PART NUMBER	DESCRIPTION
9	10	9170	134270	5/8-11 X 2.00 GRADE#8 HHCS
8	12	9190	919526	NUT, 5/8-11 NYLON LOCK GR 8
7	24	9190	919880	WASHER 5/8 FLAT
6	12	9190	129115	1/2 WASHER - HARDENED
5	2	0900	216877	TIE STRAP, U-BOLTS
4	2	9330	216876	U-BOLT-0.50"D X 4.25"CE X 11"
3	2	4233	228808	BRACKET-2017 FORD FRNT MNTG
2	1	4233	228821-02	BRACKET-REAR MOUNTING-RH
1	1	4233	228821-01	BRACKET-REAR MOUNTING-LH

TITLE: CST 134 INSTALLATION-'17 FORD

GA.	RAW MAT'L CODE	SHEAR SIZE OR PURCH. DATA		
MATL CODE	RAW MAT'L QTY	FLOW	TYPE CODE 1	U/M EA

IMPORTANT NOTE
THIS DRAWING REPRESENTS CONFIDENTIAL INFORMATION AND IS THE EXCLUSIVE PROPERTY OF STAHL A SCOTT FETZER COMPANY, NEITHER THE DRAWING NOR ITS CONTENTS ARE TO BE USED, REPRODUCED, OR DISCLOSED, IN WHOLE OR IN PART, WITHOUT PRIOR EXPRESSED WRITTEN CONSENT OF STAHL. ALL COPIES OF THIS DRAWING SHALL BE RETURNED UPON REQUEST.

TOLERANCES UNLESS OTHERWISE SPECIFIED
ALL FINISH DEPTS. TO OUTSIDE UNLESS OTHERWISE SPECIFIED
.X ± .060 or .5°
.XX ± .030 or .5°
.XXX ± .010
REPORT ERRORS
DO NOT SCALE DRAWINGS

STAHL

DRAWN	DATE	SCALE	DWG I.D.	DRAWING NO.
JJS	11-21-16	1=16	4233	209370-17F-84CA